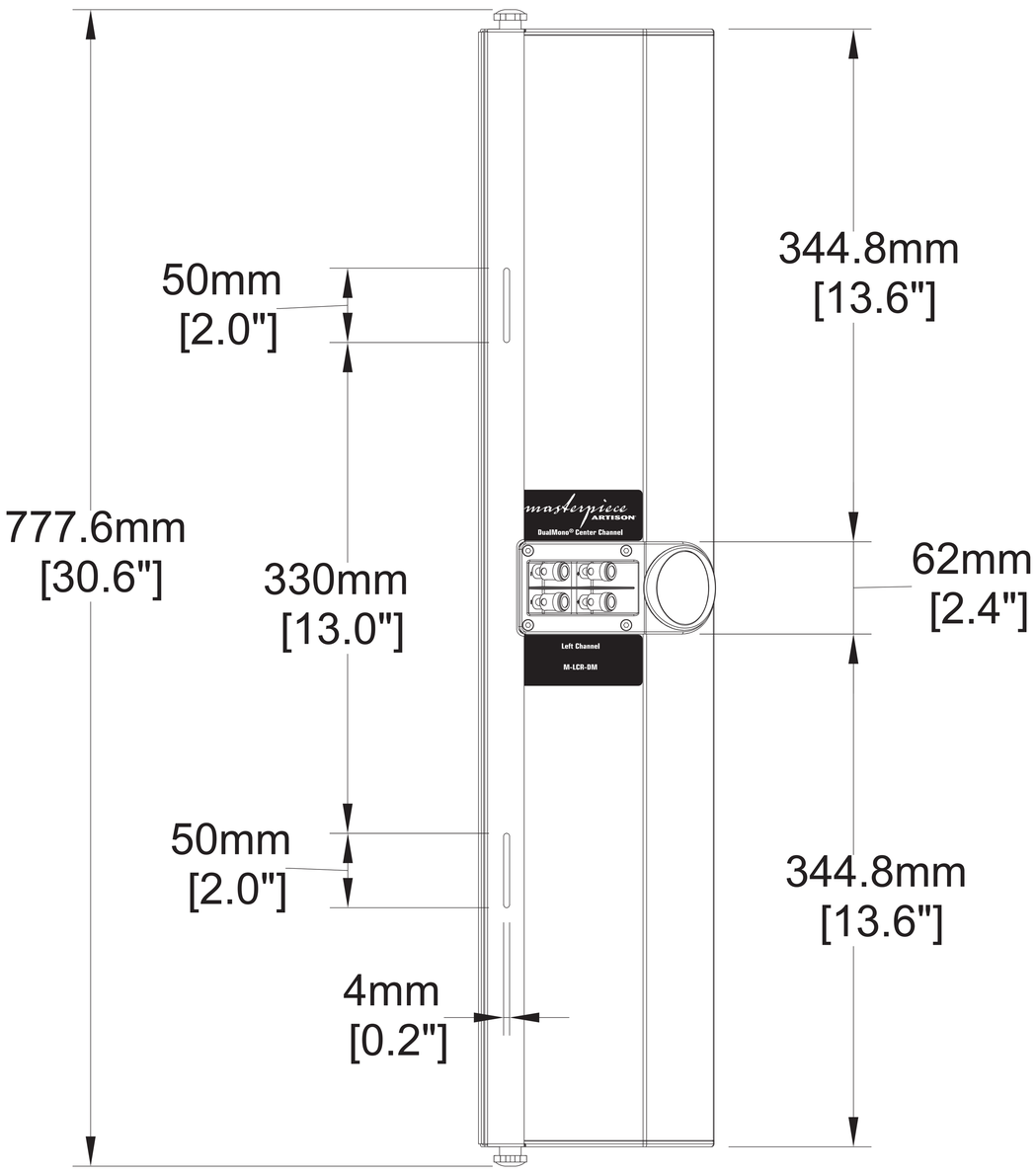

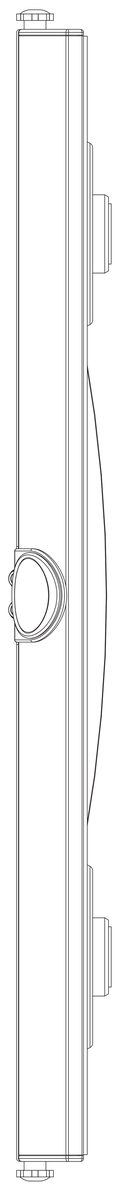

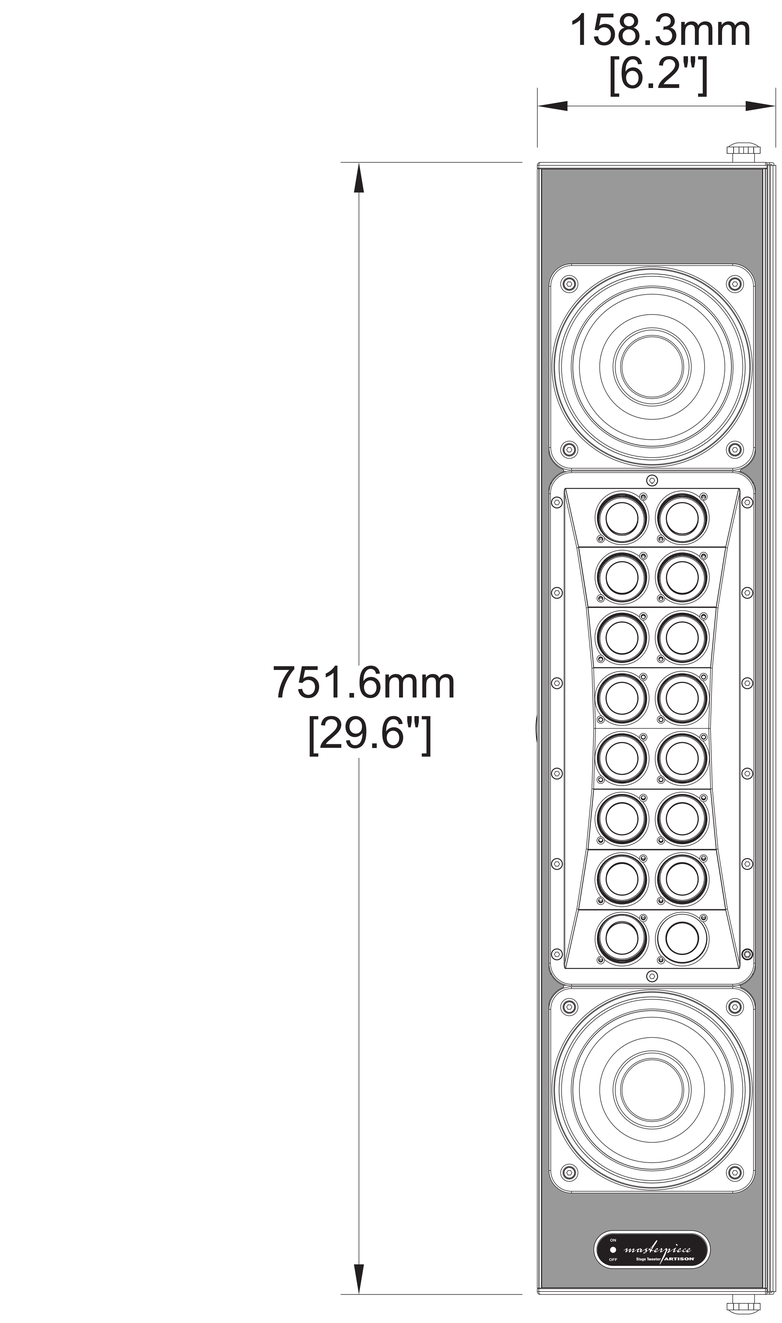

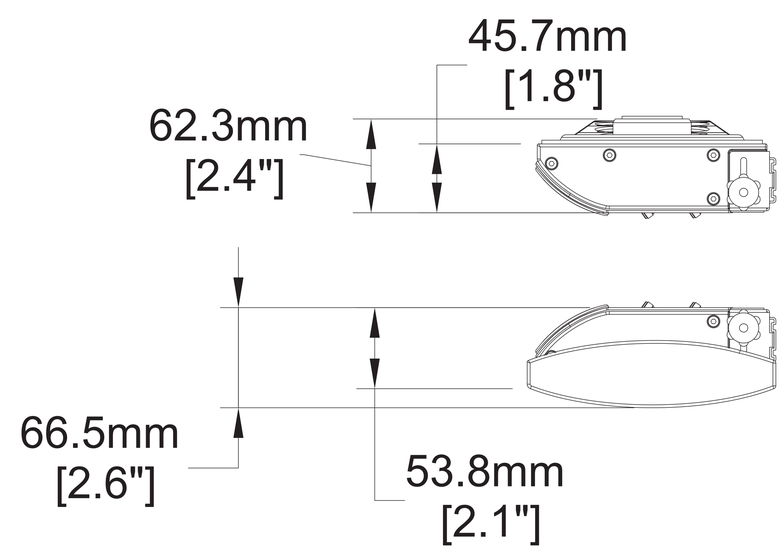

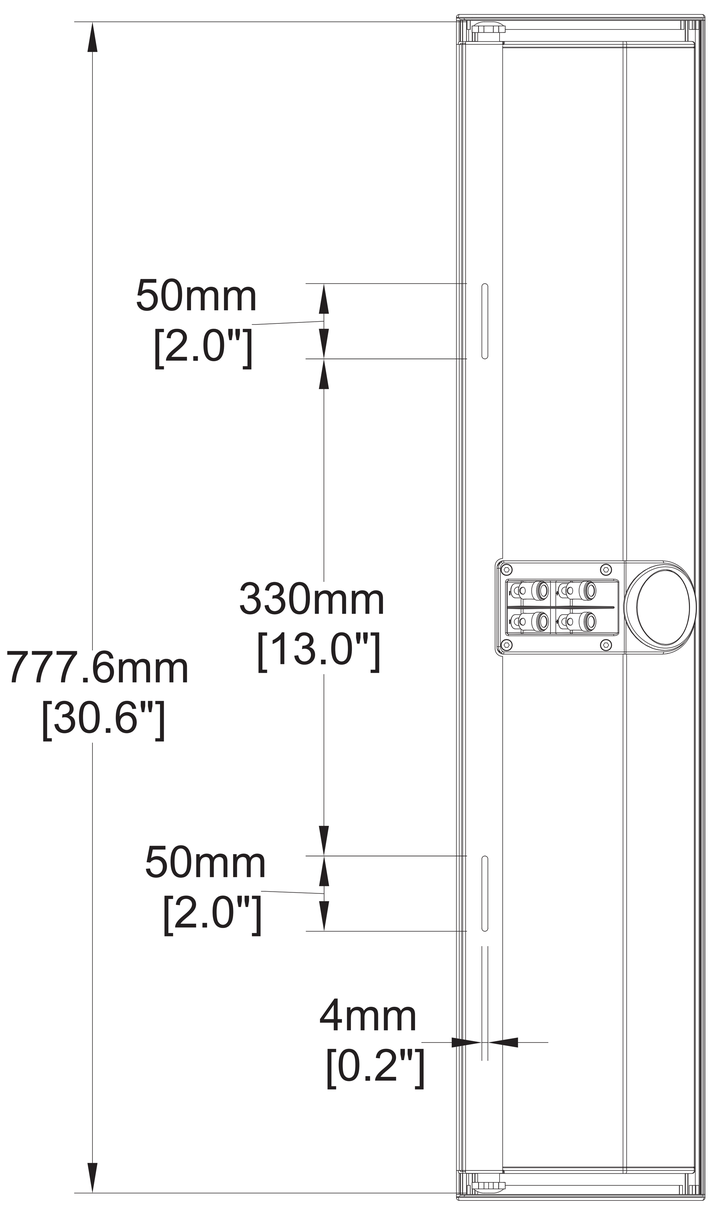

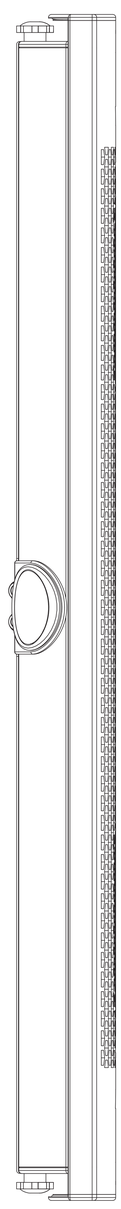

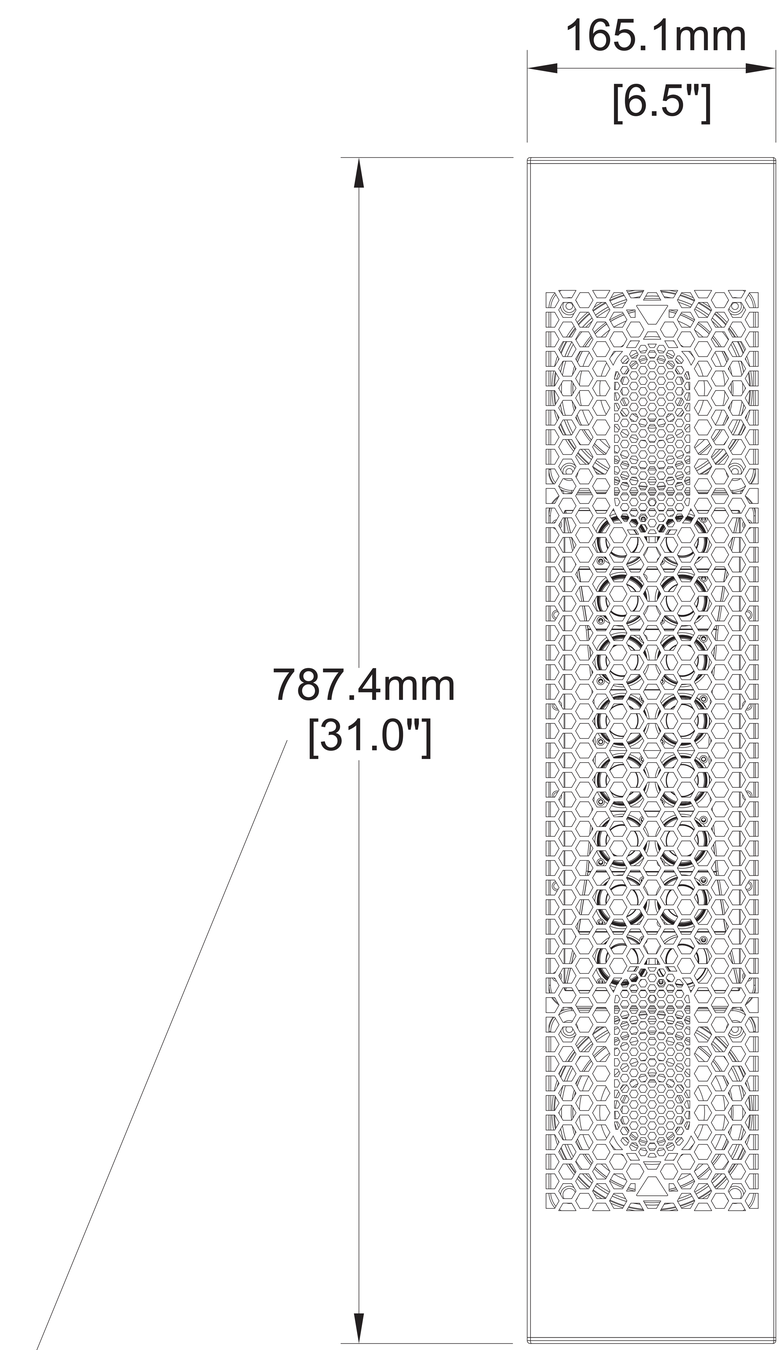

NOTE: MINIMUM GRILLE HEIGHT
762mm [30.0"]